TRIA1

PRODUCT SPECIFICATIONS*
Tempered glass shelves support up to:
30 lbs (13,6 kg) maximum capacity
Glass thickness: 6mm
Mounting: Single-stud
Dimensions: 17.5" w x 16.5" h x 16.5" d
Available in: Black with black glass
c UL us LISTED

The Tria Series wall shelf systems offer hassle-free shelving and cable management solutions for any environment and can be used with or without a TV. User-friendly features like adjustable shelves and paintable, trimable covers make them customizeable for any application. Tria1 is a 1-shelf do-it-yourself solution that allows you to neatly organize components right under your TV without the need to run the connection throught your wall.

PRODUCT BENEFITS*

- Fully adjustable shelf at 1" increments
- Integrated cable management hides wires
- Paintable and trimable covers
- Easy to install
- Can be used with or without TV
- Compatible with Tria 2
- Includes complete hardware kit

*Subject to change

SERIES:

TRIA TRIA 2

Easily snap covers onto spine to route and hide wires

TRIA

inches (mm)

Shelves are adjustable at 1" (25mm) increments

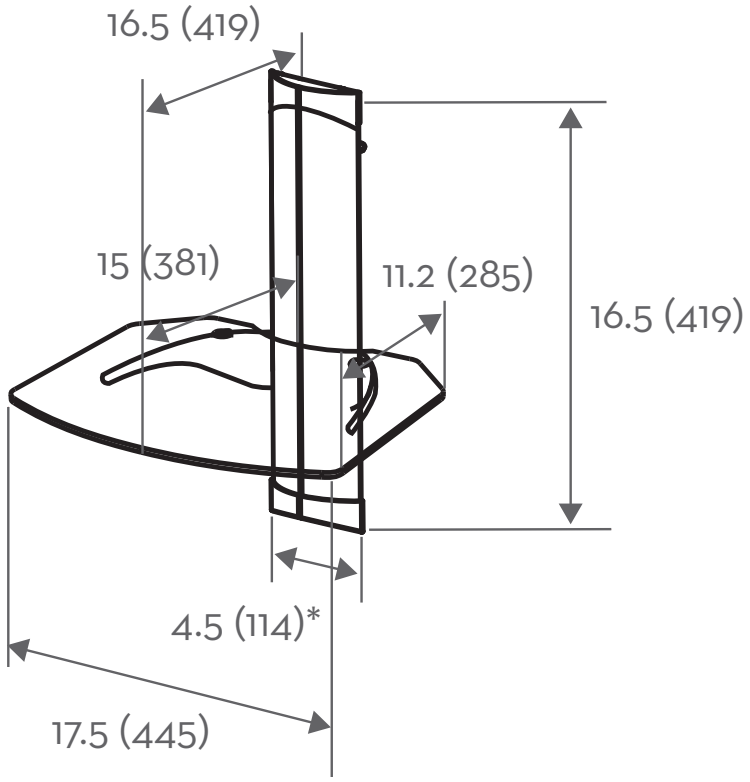

* 4.2 inches (107mm) without end-cap

c UL US LISTED

	UPC	**Dimensions WxDxH** inches (mm)	**Wt** lbs (kg)	**Qty**
Box	728901022708	18.9 x 16.9 x 3.9 (479x429x98)	10.8 (4,9)	--
MC	728901716157	20.2 x 17.4 x 9.1 (514x441x232)	23.8 (10,8)	2

Box Contents	**Qty**
Wall plate	1
Shelf bracket	3
Glass shelf	3
Cable cover	3

Box Contents	**Qty**
End cap	1
Complete hardware kit	1
Instruction manual	1

OmniMount is a registered trademark and brand of Ergotron, Inc. ©2017